electronics

MDPI

Article

Deep Learning-Based Human Activity Recognition Using Binary Ambient Sensors

Qixuan Zhao, Alireza Ghasemi, Ahmed Saif * and Lila Bossard

Department of Industrial Engineering, Dalhousie University, Halifax, NS B3J 1B6, Canada; qixuan.zhao@dal.ca (Q.Z.); alireza.ghasemi@dal.ca (A.G.)
* Correspondence: ahmed.saif@dal.ca

Abstract

Human Activity Recognition (HAR) has become crucial across various domains, including healthcare, smart homes, and security systems, owing to the proliferation of Internet of Things (IoT) devices. Several Machine Learning (ML) techniques, including Convolutional Neural Networks (CNNs) and Long Short-Term Memory (LSTM), have been proposed for HAR. However, they are still deficient in addressing the challenges of noisy features and insufficient data. This paper introduces a novel approach to tackle these two challenges, employing a Deep Learning (DL) Ensemble-Based Stacking Neural Network (SNN) combined with Generative Adversarial Networks (GANs) for HAR based on ambient sensors. Our proposed deep learning ensemble-based approach outperforms traditional ML techniques and enables robust and reliable recognition of activities in real-world scenarios. Comprehensive experiments conducted on six benchmark datasets from the CASAS smart home project demonstrate that the proposed stacking framework achieves superior accuracy on five out of six datasets when compared to literature-reported state-of-the-art baselines, with improvements ranging from 3.36 to 39.21 percentage points and an average gain of 13.28 percentage points. Although the baseline marginally outperforms the proposed models on one dataset (Aruba) in terms of accuracy, this exception does not alter the overall trend of consistent performance gains across diverse environments. Statistical significance of these improvements is further confirmed using the Wilcoxon signed-rank test. Moreover, the ASGAN-augmented models consistently improve macro-F1 performance over the corresponding baselines on five out of six datasets, while achieving comparable performance on the Milan dataset. The proposed GAN-based method further improves the activity recognition accuracy by a maximum of 4.77 percentage points, and an average of 1.28 percentage points compared to baseline models. By combining ensemble-based DL with GAN-generated synthetic data, a more robust and effective solution for ambient HAR addressing both accuracy and data imbalance challenges in real-world smart home settings is achieved.

Keywords: human activity recognition; deep learning; neural networks; generative adversarial networks

Check for updates

Academic Editor: George A. Tsihrintzis

Received: 8 November 2025
Revised: 12 January 2026
Accepted: 16 January 2026
Published: 19 January 2026

Copyright: © 2026 by the authors. Licensee MDPI, Basel, Switzerland. This article is an open access article distributed under the terms and conditions of the Creative Commons Attribution (CC BY) license.

1. Introduction

Human Activity Recognition (HAR) has become a critical component in the development of intelligent and context-aware environments, particularly within Smart Homes and Ambient Assisted Living (AAL) systems. The ability to automatically identify and interpret patterns of Activities of Daily Living (ADLs) enables applications in healthcare, elderly

care, long-term behavioral monitoring, security, and smart home automation. In particular, HAR is essential for maintaining personal well-being, health, and social participation, and assessing physical vulnerability and functional autonomy [1].

HAR approaches are traditionally categorized into camera-based and sensor-based techniques. Although camera-based systems provide rich visual information, they suffer from high computational complexity, sensitivity to occlusion, challenges in foreground segmentation, and serious privacy concerns [2]. Sensor-based HAR alleviates many of these issues. They can be further divided into wearable and ambient sensing paradigms. Wearable sensors, such as smartwatches and smartphones, have been explored to capture detailed motion patterns [3], but their reliance on continuous user compliance limits comfort and long-term adoption. Consequently, ambient sensors have emerged as a preferred solution for unobtrusive HAR, particularly in residential settings.

Ambient sensors include motion detectors, contact switches, passive infrared sensors, break-beam sensors, pressure mats, and other devices embedded within the environment to detect changes in physical states. Each change is recorded as an event reflecting human–environment interaction, which can be analyzed to infer actions and activities. This paradigm, commonly referred to as Ambient Sensor-Based Human Activity Recognition (AHAR), offers several advantages: low cost, ease of installation, minimal invasiveness, and preservation of privacy by avoiding cameras and microphones [4]. These characteristics make AHAR especially suitable for continuous, long-term monitoring in smart homes and AAL environments.

From a system perspective, HAR pipelines encompass multiple operational modules, including data acquisition, preprocessing for noise elimination and distortion reduction, feature extraction and selection, and classification [4]. However, AHAR presents unique challenges; ambient sensor data is typically sparse, binary, and event-driven, while human activities exhibit high variability in execution styles. This variability leads to inconsistencies in sensor streams, making it difficult to segment continuous data into distinct activities and assign accurate labels. Moreover, real-world deployments frequently suffer from limited or missing annotations, significantly constraining supervised learning approaches [5].

Early AHAR systems relied on traditional machine learning (ML) models such as Hidden Markov Models (HMM), Conditional Random Fields (CRF), Hidden Semi-Markov Models (HSMM), Semi-Markov CRFs (SMCRF), Naïve Bayes, and Support Vector Machines (SVM). While these approaches demonstrated the feasibility of AHAR, their dependence on handcrafted features and manually segmented data limited their scalability, robustness, and generalization across different users and sensor layouts [6].

Recent advances in Deep Learning (DL) have fundamentally reshaped AHAR research. Deep neural networks can automatically learn hierarchical spatial and temporal representations directly from raw sensor data, enabling end-to-end learning without manual feature engineering [7]. In more recent years, DL-based methods dominate smart-home HAR research [6,8–14], showing strong potential for modeling spatiotemporal patterns in ambient sensor data. However, despite their success, DL-based AHAR systems continue to face critical challenges, including limited labeled data, poor generalization across environments, and the reliance on oracle-segmented input windows. Some recent studies have addressed these challenges by enhancing the temporal modeling and contextual awareness in ambient sensor-based HAR. For example, recurrent architectures with bidirectional temporal modeling have been shown to improve recognition accuracy for ADLs by incorporating contextual cues such as previous activities and time information [15].

Additionally, context-aware representations that exploit sensor layout and spatial relationships have been proposed to reduce noise and improve robustness across multiple environments [16]. More recently, research efforts have begun to move beyond

fully supervised paradigms. Self-supervised and attention-based models have been proposed to learn meaningful spatiotemporal representations from unlabeled ambient sensor data, explicitly targeting scenarios with scarce or missing annotations [17]. In parallel, transformer-based architectures have emerged as promising alternatives for capturing long-range dependencies and contextual interactions across multiple sensor sequences in smart home environments [18].

To further address some of these limitations, this work proposes a novel learning-based AHAR framework that integrates deep stacking neural networks (SNNs) with Generative Adversarial Networks (GANs) [5]. The proposed approach leverages adversarial data augmentation to mitigate data scarcity while enhancing feature representation learning and model robustness. By embedding data generation directly into the training process, the framework provides a scalable pathway for deploying AHAR systems in real-world environments, where collecting large volumes of labeled sensor data is impractical. Importantly, the proposed methodology preserves the privacy-friendly and unobtrusive advantages of ambient sensors while supporting real-time recognition in smart home settings.

In summary, the paper makes the following contributions to AHAR:

1. We propose a DL-based SNN that systematically integrates diversified Convolutional Neural Network (CNN) and Long Short-Term Memory (LSTM) base models to jointly capture complementary spatial and temporal characteristics of ambient sensor data, improving robustness and generalization across smart-home environments.
2. We introduce an Ambient Sensor Generative Adversarial Network (ASGAN) designed to generate realistic synthetic ambient sensor sequences, addressing the challenge of limited labeled data and enhancing model performance through adversarial data augmentation.
3. We provide a comprehensive empirical evaluation on multiple CASAS smart-home datasets, demonstrating statistically significant accuracy improvements over representative state-of-the-art (SOTA) AHAR methods using rigorous non-parametric statistical tests.
4. We analyze the impact of architectural diversity, data diversity, and sliding window size diversity within stacking-based AHAR frameworks, offering practical insights into ensemble design for ambient sensor data.

Together, these contributions present a unified and scalable AHAR framework that improves recognition accuracy while remaining suitable for privacy-preserving, real-world smart-home deployments.

The remainder of this paper is organized as follows. The next section reviews related work in AHAR. Section 3 presents the proposed DL-based stacking framework, whereas the ASGAN for synthetic data generation is introduced in Section 4. Section 5 describes the experimental setup and evaluates the proposed framework's performance on six ambient sensor-based datasets. Finally, conclusions and directions for future research are outlined in Section 6.

The following literature review is mainly focused on studies that support real-time activity recognition using unobtrusive ambient sensors embedded in smart environments [19,20]. Emphasis is placed on approaches that model spatiotemporal aspects of the activities to capture both location and timing information [21], and that employ DL classifiers to avoid manual feature design and accommodate variability in ADLs [22]. Additionally, works utilizing the CASAS smart home projects are prioritized due to their extensive sensor coverage and detailed event logs, enabling better performance evaluation and comparison [23].

2. Literature Review

AHAR aims to infer residents' activities using sensor data collected from the surrounding environment. Typical ambient sensors include motion detectors, contact and switch sensors, and pressure sensors, which capture information related to location, movement, and object usage. Compared to wearable or vision-based systems, ambient sensors provide a non-intrusive and privacy-preserving means of continuous monitoring, making them well suited for smart home and AAL applications.

Early AHAR systems predominantly relied on conventional ML techniques. These approaches demonstrated reasonable performance but consistently faced two fundamental challenges: feature extraction and data heterogeneity [24]. Feature extraction plays a critical role in determining classifier performance [25]. Traditional methods depend heavily on domain knowledge to manually engineer features such as sensor activation states, activation durations, and activation sequences. For example, toilet sensor activation strongly suggests bathroom usage, while a short sequence of kitchen and restroom activations followed by bedroom activity may indicate movement between rooms. While intuitive, such handcrafted features are difficult to generalize, particularly in complex sensor networks where prior knowledge is incomplete or unavailable [25].

Moreover, manually extracted features may be insufficiently discriminative or include redundant and irrelevant information, negatively affecting classifier performance [5,26]. These limitations are aggravated by the heterogeneity arising from differences in user behavior and sensor layouts. Individuals perform activities in diverse ways, and variations in sensor placement across homes lead to significantly different data distributions. As a result, models trained in one environment often fail to generalize to others unless explicitly adapted [24]. Several studies have attempted to mitigate these limitations using refined feature engineering and incremental learning strategies. For instance, incremental SVM algorithms combined with dependency-aware sensor feature extraction have been proposed to improve adaptability and learning efficiency across evolving data streams [27]. While effective, these approaches still rely heavily on handcrafted features and predefined segmentation assumptions.

To overcome these challenges, DL methods have gained increasing attention due to their ability to automatically learn feature representations from raw sensor data [28]. Early DL-based AHAR approaches employed Restricted Boltzmann Machines (RBM) for unsupervised feature extraction using single-layer feed-forward architectures [10]. Subsequent works introduced one-dimensional CNNs to capture local temporal dependencies in sensor event sequences [29], followed by two-dimensional CNNs that model structured representations of sensor–time relationships [11,12]. These models exploit parameter sharing across time to efficiently learn local patterns; however, CNNs have a limited ability to capture long-range temporal dependencies between distant events [14]. To incorporate contextual awareness beyond local temporal patterns, some recent approaches integrate spatial information derived from sensor layouts. For example, spatial distance matrices constructed from sensor placement have been used to encode environmental context and sensor contribution significance, improving activity recognition performance in multi-environment settings [16].

Recurrent neural networks (RNNs), particularly LSTM networks, were also introduced to address this limitation. LSTMs have proven highly effective in modeling long-term dependencies and automatically learning temporal information from raw ambient sensor data, achieving strong performance in smart home HAR scenarios [30]. Extensions such as bidirectional LSTMs and cascading LSTMs further improve recognition accuracy by explicitly modeling multi-modal sensor channels and richer temporal context. This line of work aligns with findings showing that explicitly incorporating temporal context—such as

previous activities and time-of-day information—into LSTM-based models can significantly improve recognition accuracy, while preserving privacy through the use of binary ambient sensors [15]. Recent studies emphasize that learning high-quality feature representations is essential for robust AHAR [31,32]. Bouchabou et al. [33], for example, combine CNNs with term frequency-based encoding to generate discriminative representations and achieve SOTA results.

Despite these advances, many DL-based HAR methods suffer from a critical limitation, namely their reliance on oracle-segmented sensor data. Fixed-size sliding windows or manually defined segments are often assumed as inputs to classification models [30,33]. However, such assumptions are unrealistic in real-world deployments, where activity boundaries are unknown, and continuous sensor streams must be processed online. This limitation directly impacts real-time applicability and scalability. Related research on activity recognition and anomaly detection further highlights this issue, as several approaches depend on pre-segmented activity data or ground truth derived from statistical heuristics, such as activity duration distributions and subevent counts [34]. Although effective in controlled settings, these assumptions limit applicability in continuous, real-world deployments where segmentation boundaries are unknown. In addition, HAR systems continue to face challenges related to model generalization and context integration [35]. Differences in sensor configurations and activity routines hinder transferability across environments, while contextual information, such as sensor location, function, temporal patterns, and user habits, is difficult to encode effectively using traditional DL architectures. These challenges motivate the need for models that can jointly address feature learning, data scarcity, segmentation robustness, and contextual variability.

These challenges are particularly pronounced in AHAR settings, where sensor data are sparse, mostly binary, event-driven, and costly to annotate, making conventional supervised learning pipelines difficult to scale. Moreover, although individual deep architectures, such as CNNs for local pattern extraction and LSTMs for long-term temporal modeling, have demonstrated effectiveness, the literature largely treats these models in isolation. This architectural separation overlooks the complementary strengths of spatial abstraction and temporal dependency modeling that are both essential for robust activity recognition from ambient sensors. Beyond recognition, some studies extend AHAR pipelines to include anomaly detection and next-activity prediction using deep neural networks, autoencoders, and LSTM-based sequence modeling [36]. While these multi-stage frameworks demonstrate the broader potential of neural approaches in smart homes, they further amplify the need for robust feature learning and sufficient training data, challenges that remain largely unaddressed in the current AHAR literature. At the same time, many SOTA models assume the availability of sufficiently large and well-balanced datasets, an assumption that is rarely satisfied in real smart-home deployments. As a result, performance gains reported in controlled experimental settings often fail to translate to operational environments characterized by limited labeled data and high variability.

These observations collectively motivate a methodological shift toward integrated learning frameworks that address learning representation and data scarcity simultaneously. In this context, stacking-based DL provides a principled mechanism for combining heterogeneous base learners, allowing multiple perspectives of the sensor data to be jointly exploited while improving robustness and generalization. Complementarily, generative modeling offers a viable pathway to mitigate annotation scarcity by synthesizing realistic training samples that preserve the statistical and temporal properties of real sensor data. However, the integration of deep stacking architectures with generative data augmentation remains underexplored in the AHAR literature.

Accordingly, this work introduces a unified framework that couples deep stacking neural networks with adversarial data generation to directly address the core limitations identified in prior research. By jointly enhancing feature representation, temporal modeling, and training data diversity, the proposed methodology is designed to bridge the gap between SOTA performance and real-world applicability in AHAR settings. The following section details the proposed methodological framework, including the stacking architecture and the ASGAN, and explains how each component contributes to overcoming the challenges of accuracy, data scarcity, and generalization in AHAR systems. A block diagram showing the overall flow of the proposed unified framework is provided in Figure 1.

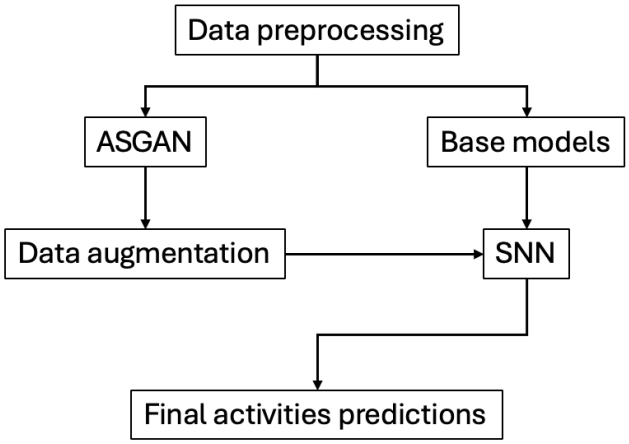

Figure 1. Block diagram of the overall flow of the proposed unified framework.

3. Model Architecture

As became obvious from the above literature review, HAR using ambient sensors faces significant challenges related to noisy features and data scarcity [5]. The primary objective for AHAR is to achieve the highest possible prediction accuracy [37]. To address the feature extraction challenge, we propose DL-based SNNs designed to operate on event-level spatiotemporal patterns, rather than exploiting handcrafted sensor-specific features. The proposed framework is intentionally designed to be agnostic to specific sensor layouts or physical characteristics, relying only on the standardized binary event streams provided by the datasets. This ensemble-based model functions by effectively combining the results from multiple base models to enhance accuracy and reduce overfitting. In other words, it is a meta-model that acts as a classifier, using the outputs of the base models as its input features by determining whether the base models have accurately learned the training data.

3.1. Deep Learning-Based Stacking Neural Networks

Ensemble-based stacking, which combines multiple ML models, has emerged as a promising technique to improve prediction accuracy by learning different features from different perspectives. As shown in Figure 2, generation and integration are the two primary stages of this technique, further delineated below.

1. Generation: In the generation phase, multiple classifiers, or base models, are created, each trained on different subsets of the data or using different structures or algorithms. These base models perform predictions independently.
2. Integration: In the integration phase, the final prediction meta-model, based on the predictions generated by the base models, is developed. Integration can be done through various methods such as averaging, voting, or using other models to combine predictions. The integration phase ensures that the final output leverages the strengths of all base models, resulting in improved accuracy and robustness.

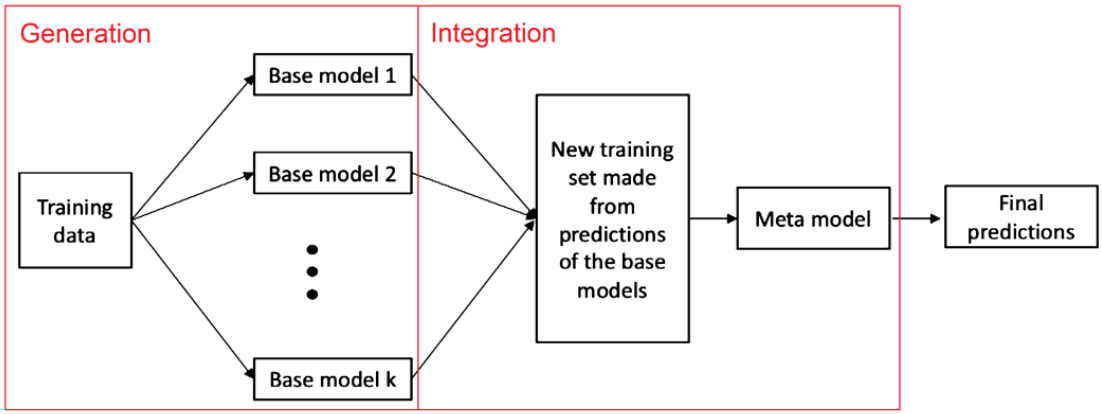

Figure 2. A schematic of the proposed DL-based SNNs.

In this work, base models are designed by applying different architectures, training data, and sliding window sizes to seek diversity. The motivation for this approach is that the above three features can influence the diversity of base models in different ways [38]. The rest of this section further explains how the base models and the ensemble-based meta-model are developed.

3.2. Architecture of Base Models

As previously mentioned, the driving idea behind stacking is to train different base models with the hope that they can learn different features of the data. These variations in architecture aim to ensure that the base models capture diverse aspects of the data, enhancing the overall performance of the stacking ensemble for AHAR.

To effectively handle the spatiotemporal input data, given CNNs' strong ability to deal with spatial information and LSTMs' ability to capture long-term dependencies and sequence prediction, we use stacking architecture of these ML techniques in our base models. In more detail, we designed six different architectures for base models: three based on CNN, and another three based on LSTM.

These six base models all share the same input structure. Given that M sensor events are traced back each time we try to recognize the current activity, and there are N sensors in the smart home, the input structure is graphically represented in Figure 3, where M represents the sliding window size. A sensor event is when the sensor's status (i.e., either open/close or on/off) changes. When sensor n is activated at sensor's event m, x_{mn} takes the value of 1, and when it is turned off, x_{mn} takes the value of -1; otherwise, it remains 0. This input matrix contains not only spatial information, i.e., status of the sensor system at a location, but also temporal information, i.e., the timestamp and the sequence of sensor events.

The three CNN base models, shown in Figures 4–6, differ in their convolutional layers and fully-connected (FC) layers, as follows:

1. **CNN-1** consists of four convolutional layers and two FC layers. Each convolutional layer is followed by a max-pooling layer.
2. **CNN-2** consists of eight convolutional layers and two FC layers. CNN-2 doubles the number of convolution layers compared to CNN-1.
3. **CNN-3** consists of four convolutional layers, similar to CNN-1, but has two additional FC layers compared to CNN-1 and CNN-2.

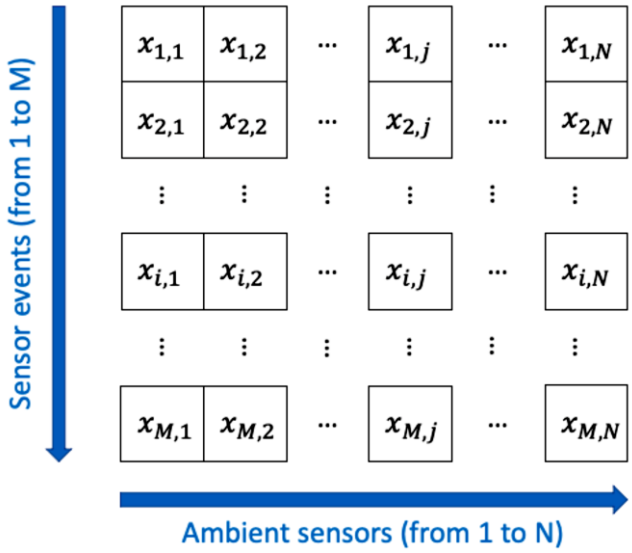

Figure 3. The Input Structure for AHAR.

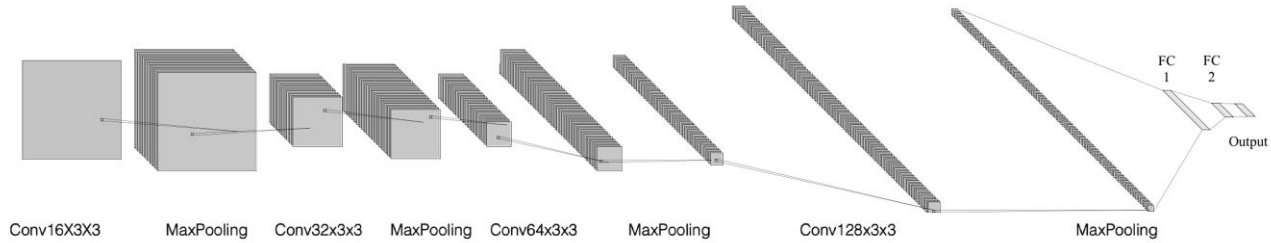

Figure 4. The architecture of base model CNN-1 with four convolution and two FC layers.

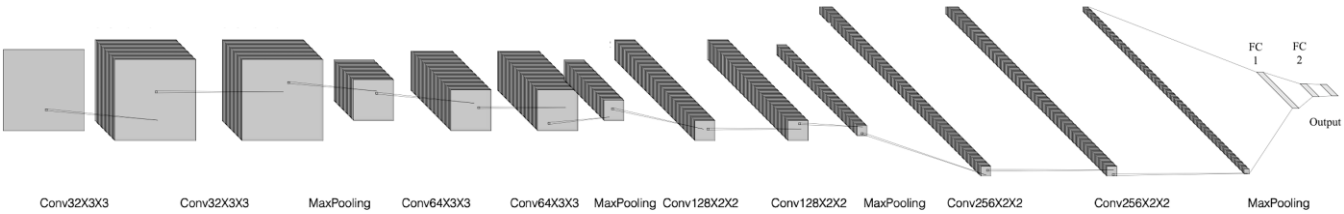

Figure 5. The architecture of base model CNN-2 with eight convolution and two FC layers.

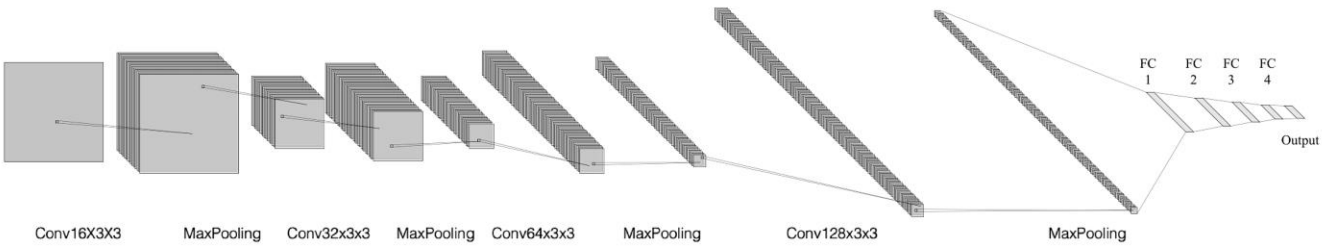

Figure 6. The architecture of base model CNN-3 with four convolution and four FC layers.

It should be noted that in CNNs, convolution layers perform the task of feature extraction, while FC layers perform classification. The deeper convolutional structure of CNN-2 allows it to capture richer and more complex spatiotemporal patterns from raw ambient sensor data before classification, exerting more effort into feature extraction than CNN-1. On the other hand, CNN-3 has two additional FC layers compared to CNN-1, increasing the model's capacity to learn more refined decision boundaries over the extracted features, potentially improving discrimination between activities that exhibit similar sensor activation patterns.

Similar to the CNN-based architectures, the LSTM base models are also designed with structural variations to balance feature extraction and classification in different ways, thereby enriching the diversity of temporal representations learned within the stacking ensemble. In LSTM-based networks, the LSTM layers are primarily responsible for modeling sequential dependencies and extracting temporal features from sensor event streams, while the FC layers transform these learned representations into activity labels. We designed three LSTM base models, shown in Figures 7–9, with varying architectures to further diversify the ensemble, as follows:

1. **LSTM-1** represents a compact baseline architecture, consisting of a single LSTM layer with 128 units followed by one FC layer. This configuration provides a direct and efficient mapping from temporal feature extraction to classification, serving as a lightweight model capable of capturing essential temporal dynamics without excessive complexity.
2. **LSTM-2** is designed to emphasize deeper temporal feature extraction by stacking two LSTM layers with progressively reduced dimensionality. The first LSTM layer, with 256 units, captures rich low- to mid-level temporal patterns and long-range dependencies, while the second LSTM layer, with 128 units, refines these representations into more abstract and compact features. Retaining a single FC layer ensures that the model's additional capacity is primarily allocated to learning complex temporal structures rather than classification, making LSTM-2 particularly suited for activities characterized by extended durations or subtle sequential variations.
3. In contrast, **LSTM-3** prioritizes classification capacity. It employs a single LSTM layer with 128 units to extract temporal features, followed by two FC layers that increase the model's ability to learn more expressive and discriminative decision boundaries. This configuration is especially beneficial when different activities share similar temporal patterns but require finer-grained separation in the feature space.

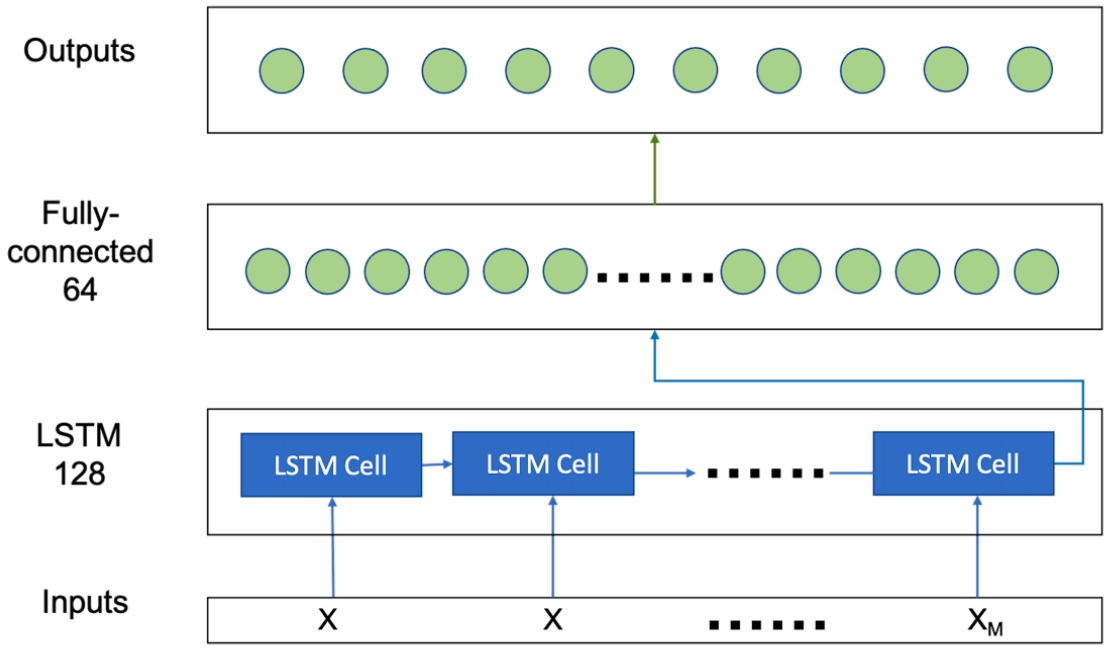

Figure 7. The architecture of base model LSTM-1 with one LSTM layer and one FC layers.

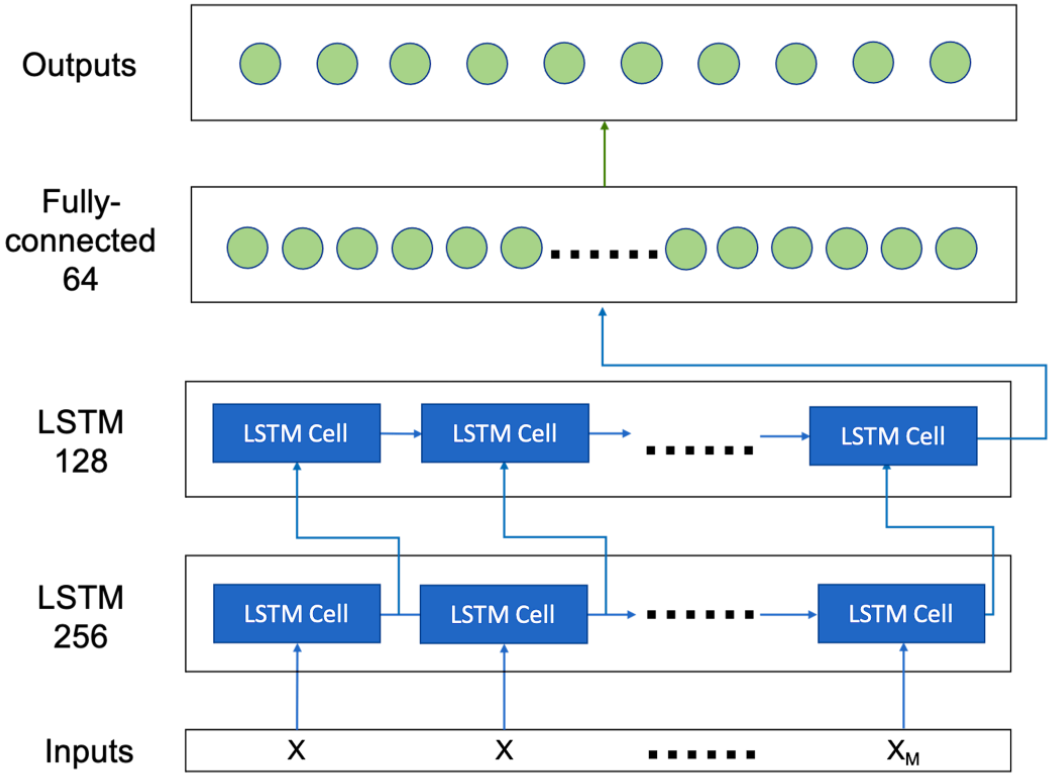

Figure 8. The architecture of base model LSTM-2 with two LSTM layers and one FC layer.

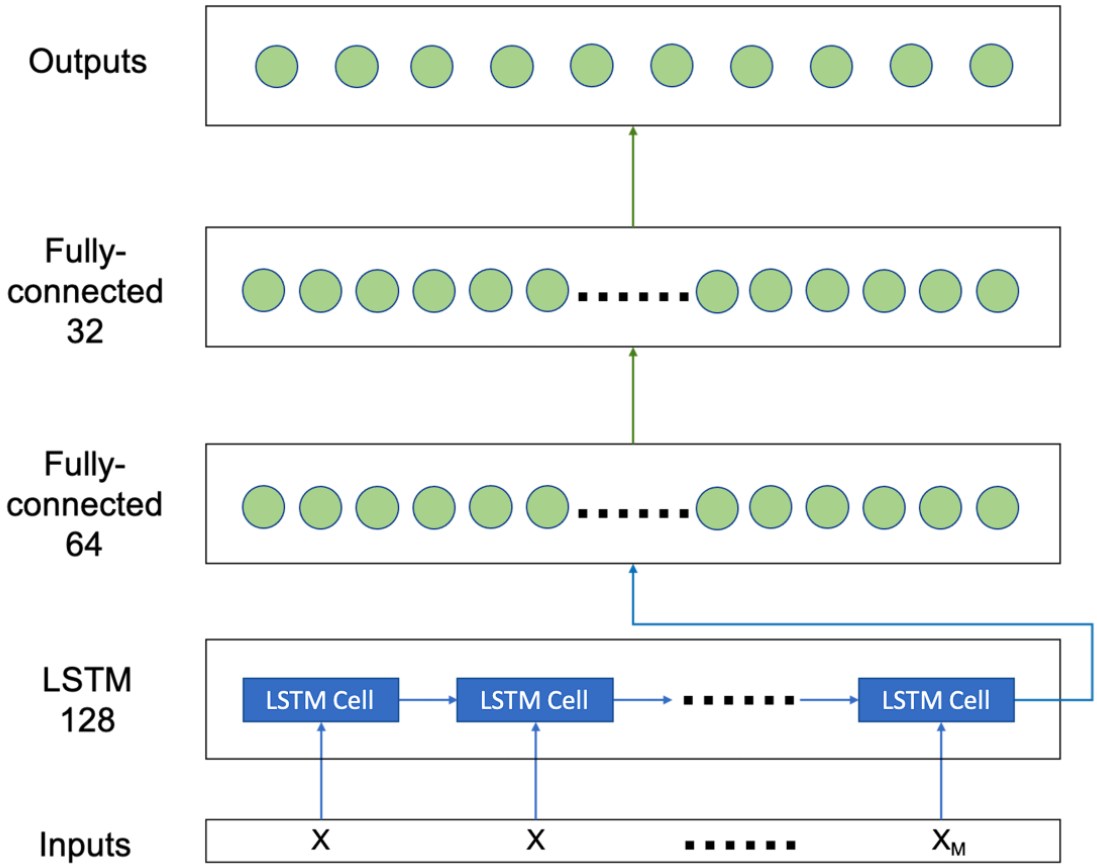

Figure 9. The architecture of base model LSTM-3 with one LSTM layer and two FC layers.

By systematically varying the depth and emphasis of LSTM and FC layers across these architectures, the proposed design ensures that each LSTM base model captures distinct aspects of temporal structure and decision-making. This architectural heterogeneity strengthens the stacking framework by allowing the ensemble to integrate complementary temporal representations, thereby improving robustness and generalization in AHAR.

3.3. Sliding Window Size of Base Models

The sliding window size (M) determines the number of consecutive sensor events included in each model input and directly influences the amount of temporal context available for activity recognition. In HAR, this parameter is critical because it governs how effectively the model can capture temporal dependencies and transitions between activities. Larger windows provide richer historical context, which can improve recognition performance by allowing the model to exploit longer-term activity patterns. However, excessively large windows may incorporate redundant or irrelevant events from preceding activities, potentially obscuring discriminative features and degrading classification accuracy [39]. Moreover, larger windows increase computational and memory requirements, which conflicts with the real-time and resource-constrained nature of smart-home deployments. Therefore, the sliding window size must balance contextual richness, noise suppression, and computational feasibility. In this work, six different sliding window sizes—50, 100, 150, 200, 250, and 300—are evaluated to systematically analyze this trade-off.

3.4. Meta-Model

The ensemble-based meta-model used in this research is shown in Figure 10. This meta-model consists of one LSTM layer with 64 units and one FC layer with 32 neurons, which jointly process the stacked outputs produced by the base models to generate the final activity predictions. The use of an LSTM layer at the meta-level is motivated by the sequential nature of the base-model outputs, allowing the meta-model to capture temporal dependencies and correlations extracted across the predictions generated by different learners. This architecture is designed to effectively combine the outputs from the base models and make accurate predictions for AHAR. An excessively large number of LSTM units relative to the number of base models can lead to overfitting, while an insufficient number of units may result in underfitting due to limited expressive power [40]. In this study, the maximum number of base models considered is 30, and the selected configuration of 64 LSTM units and 32 FC neurons provides sufficient capacity to integrate diverse model outputs without introducing unnecessary complexity. By adjusting the number of base models and the complexity of the meta model, the proposed stacking framework aims to achieve robust performance while mitigating overfitting in AHAR.

3.5. Pre-Test Setup

Before proceeding with the methodology, we conducted some preliminary tests to investigate whether using diverse base model architectures, training datasets, and sliding window sizes affect the prediction accuracy of the stacking model. Initially, multiple base models were trained on subsets of the original data using different hyperparameter configurations. The base model with the highest accuracy on the test data is selected as the *Benchmark*.

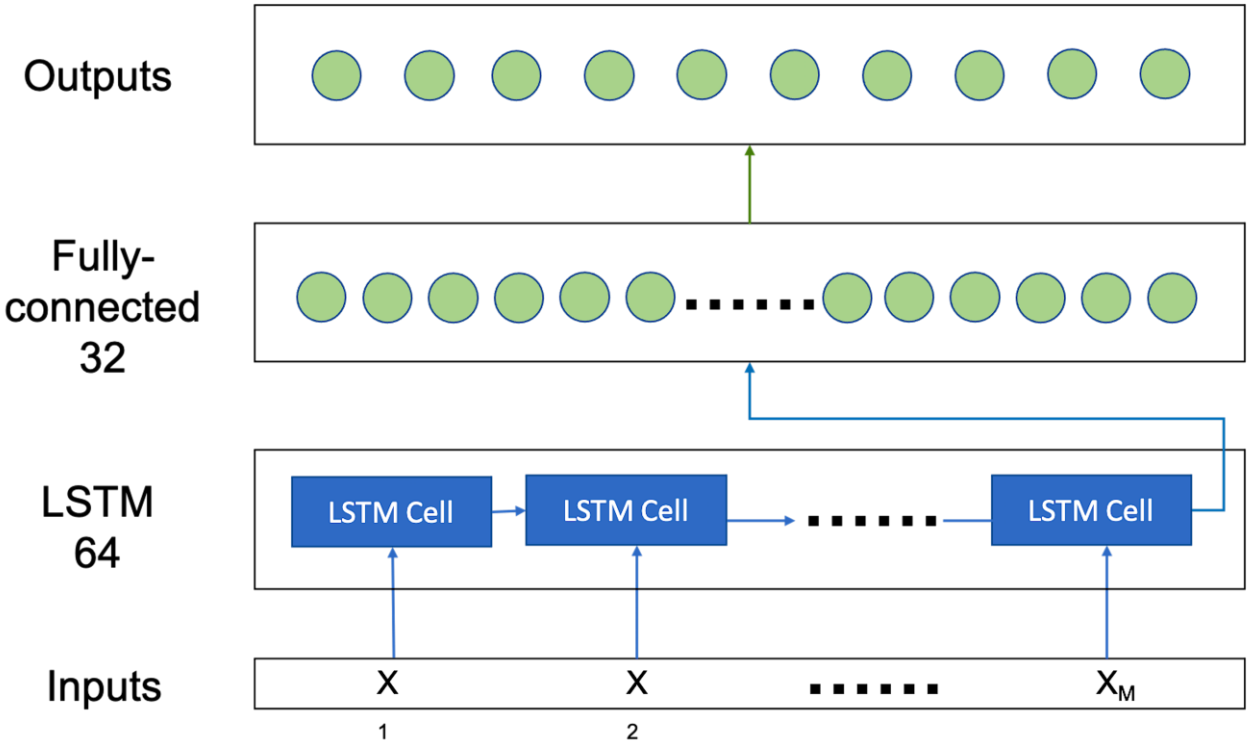

Figure 10. The architecture of the meta-model.

To quantify the impact of *base model architecture diversity*, we built two stacking models:

1. *Model 1* has six base models with the same architecture as the *Benchmark*.
2. *Model 2* has six base models with different architectures.

Therefore, *Benchmark*, *Model 1*, and *Model 2* represent a non-stacking model, a stacking model with no architecture diversity, and a stacking model with architecture diversity, respectively. Figure 11 shows the performances of *Benchmark*, *Model 1*, and *Model 2* on the datasets, measured by prediction accuracy. While visual inspection indicates that the three models perform differently on the datasets, visual inspections alone are insufficient to establish statistical significance. Moreover, since the models are evaluated across multiple datasets, repeated pairwise comparisons using parametric tests (e.g., *t*-tests) would violate independence assumptions and inflate the risk of Type I error. Therefore, a Nemenyi post hoc test is employed following a non-parametric ranking-based comparison to rigorously assess whether the observed performance differences are statistically significant across datasets [41]. The Nemenyi test is particularly appropriate in this context because it compares multiple learning algorithms over multiple datasets without assuming normality and controls for multiple comparisons by analyzing differences in average ranks rather than raw accuracy values. The results, shown in Figure 12, demonstrate that the *p*-values for the (*Benchmark*–*Model 2*) and (*Model 1*–*Model 2*) pairs are both smaller than 0.05, indicating that *Model 2*, consisting of diverse base models with different architectures, is significantly better than the other two models. These findings provide strong statistical evidence that incorporating architectural diversity among base models yields a measurable and consistent improvement in stacking-based AHAR performance.

Similarly, in another experiment to test the impact of *data diversity*, three models were trained: *Benchmark* (as defined earlier), *Model 3*, whose base models were trained by the same training data, and *Model 4*, whose base models were trained by different subsets of training data. Since the models were evaluated across multiple datasets, a Friedman test was employed to statistically assess whether their prediction accuracies were equivalent.

The Friedman test is a non-parametric, rank-based test suitable for comparing multiple models across multiple datasets without assuming normality, making it well-suited for this type of repeated-measures evaluation. The Friedman test using the null hypothesis that they are similar in terms of prediction accuracy resulted in a p-value of 0.01. Hence, there is strong evidence that training data diversity significantly enhances the performance of stacking-based HAR models using ambient sensors, demonstrating the benefit of leveraging varied training subsets to improve model generalization and robustness.

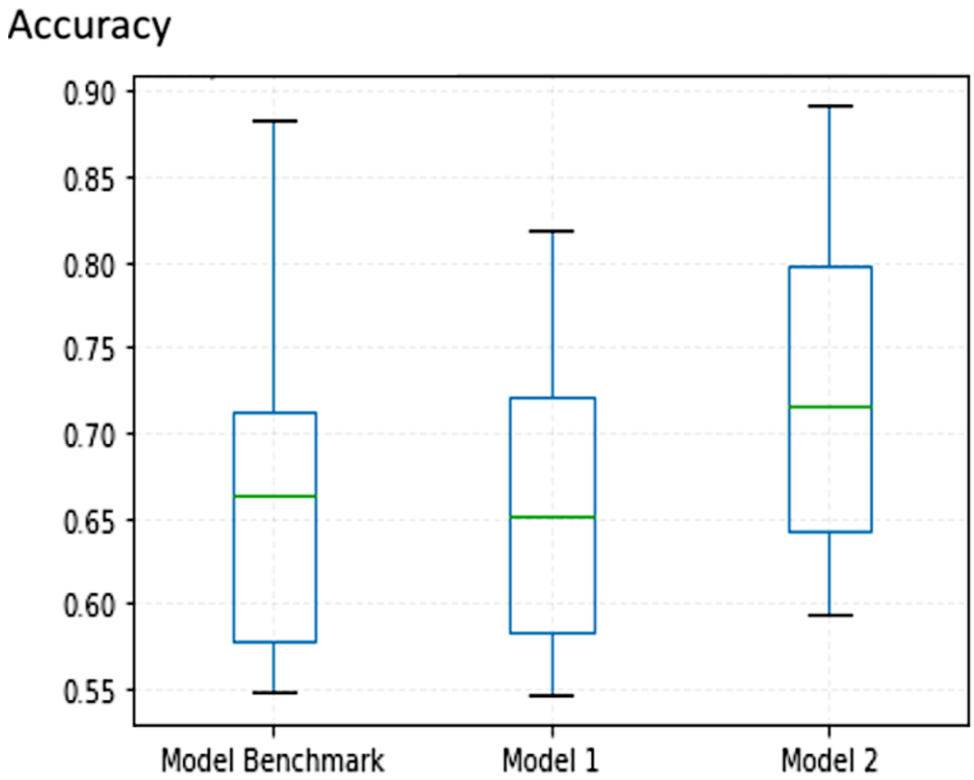

Figure 11. Box plot comparison of the accuracy of *Benchmark*, *Model 1* and *Model 2*.

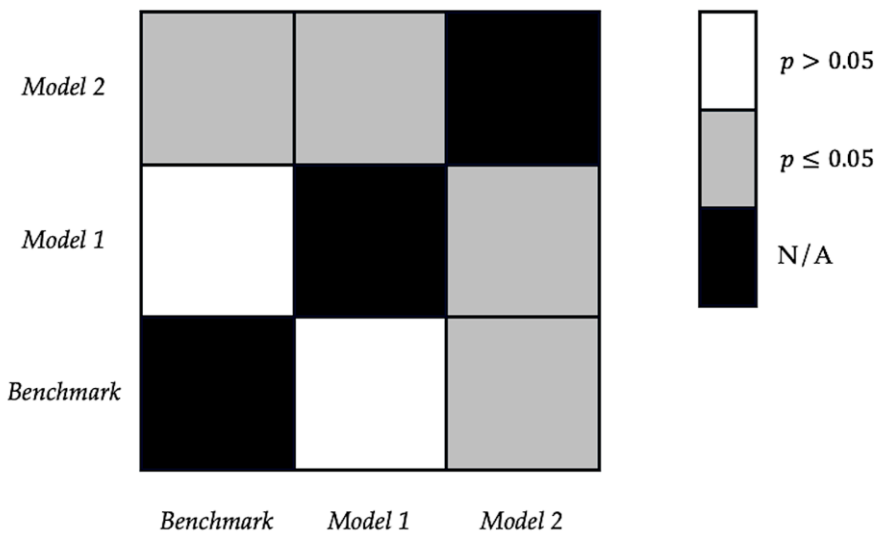

Figure 12. The p-values of the Nemenyi test for pairs of *Benchmark*, *Model 1* and *Model 2*. $p \leq 0.05$ ($p > 0.05$) indicates (no) statistically significant difference in accuracy between the two models. N/A means not applicable.

Finally, to test the influence of *sliding window size diversity*, and in addition to the *Benchmark* model used in the previous tests, two additional models, *Model 5* and *Model 6*, were used.

1. *Model 5* consists of base models of the same sliding window size.
2. *Model 6* consists of base models with different sliding window sizes.

Diversity in window sizes allows different base models to capture complementary temporal patterns, ranging from short-term transitions to longer activity sequences. A Friedman test was first conducted to assess whether the performance differences among the three models were statistically significant, resulting in a p-value of 0.006. This result indicates strong evidence that at least one model differs from the others in prediction accuracy. To pinpoint which comparisons contributed to this difference, a post hoc Nemenyi test was performed. The results show that the p-value for the (*Benchmark–Model 6*) pair is below 0.05, confirming that stacking models with diverse sliding window sizes significantly outperform those using a uniform window size.

4. Ambient Sensor Generative Adversarial Network

In addition to designing effective recognition models, data scarcity remains a critical challenge in AHAR. Collecting and annotating large-scale ambient sensor datasets is time-consuming, costly, and often impractical in real-world smart home deployments. To address this limitation, we propose ASGAN, a generative framework designed to synthesize realistic ambient sensor data that can be used to augment training datasets and improve AHAR model performance.

GANs are powerful generative models that learn the underlying distribution of real data and produce synthetic samples that resemble the original data distribution. A GAN consists of two adversarial components trained simultaneously [42,43].

1. Generator: The generator maps random noise into synthetic data, aiming to produce outputs that are indistinguishable from real data.
2. Discriminator: The discriminator evaluates output samples and attempts to correctly classify them as either real data or synthetic (fake) data.

Through this adversarial training process, the generator progressively learns to produce increasingly realistic data, while the discriminator becomes more effective at distinguishing real from synthetic samples.

Our proposed ASGAN has the architecture shown in Figure 13. Given that ambient sensor data for HAR is inherently temporal, sequential, and event-driven, modeling long-range temporal dependencies is essential for generating realistic sensor streams. For this reason, both the generator and discriminator are implemented using LSTM networks, which are well suited for capturing temporal dynamics and sequence dependencies in time-series data.

4.1. Generator Network

The architecture of the generator is demonstrated in Figure 14. It consists of three LSTM layers with 128, 32, and 1 LSTM units, respectively. The first two LSTM layers are responsible for learning high-level temporal patterns from the inputs, effectively capturing dependencies that resemble real sensor event transitions. The final LSTM layer leverages these learned representations to generate synthetic ambient sensor sequences that mimic the temporal structure and activation patterns of real sensor data. This layered design allows the generator to progressively refine temporal abstractions before producing output sequences suitable for AHAR training.

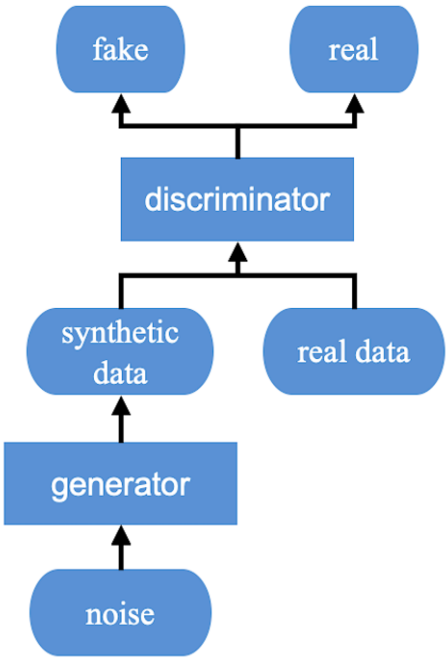

Figure 13. The proposed ASGAN's architecture.

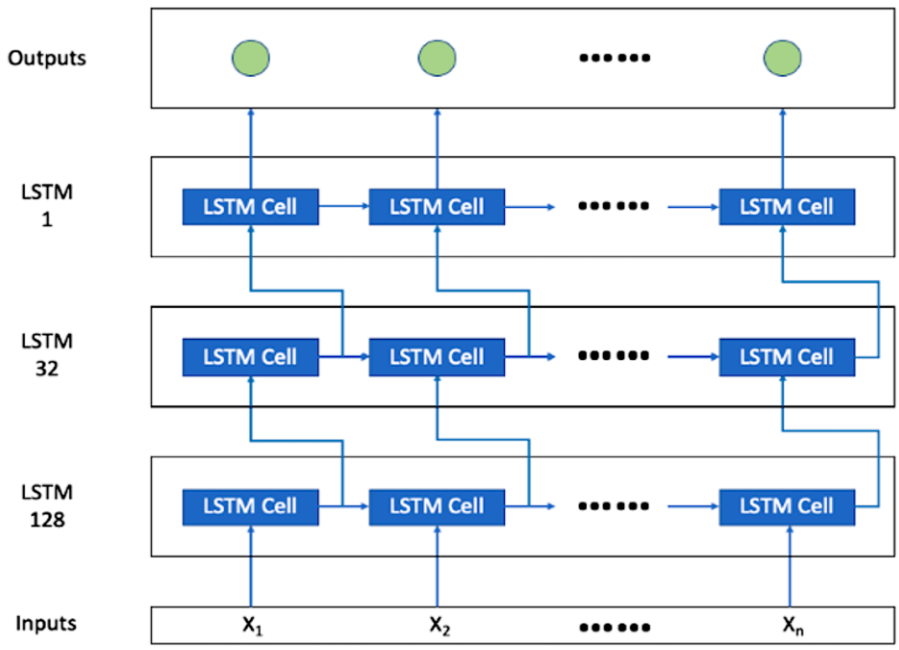

Figure 14. Architecture of the Generator in the proposed ASGAN.

4.2. Discriminator Network

The discriminator architecture, illustrated in Figure 15, consists of four LSTM layers. The first three layers focus on extracting discriminative temporal features from the input sequences whether real or synthetic, while the last layer performs binary classification, assigning each input sequence a label indicating whether it originates from real sensor data or from the generator. By enforcing strong temporal discrimination, the discriminator guides the generator toward producing more realistic and diverse sensor sequences.

Overall, the LSTM-based architecture of Generator and Discriminator networks in the proposed ASGAN ensures that the generated data preserves the temporal continuity, sparsity, and event-driven characteristics inherent to actual ambient sensor streams.

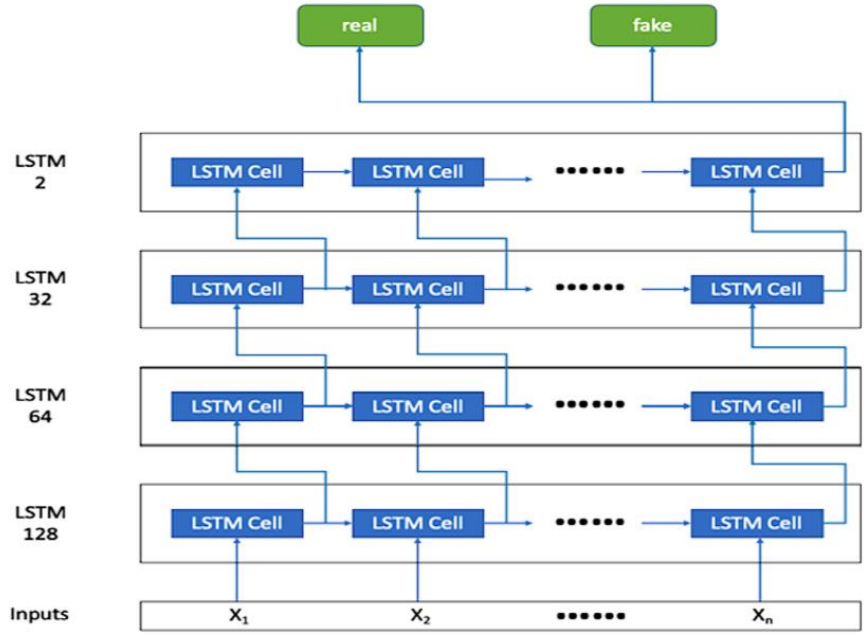

Figure 15. Architecture of the Discriminator in the proposed ASGAN.

5. Experiments and Results

All experiments were executed using a single NVIDIA (Santa Clara, CA, USA) GeForce 750Ti GPU with 2GB memory, and the ML models were built using the TensorFlow library (v. 2.4) on Python (v. 3.9). The rest of this section presents the results obtained from the numerical experiments conducted.

To ensure a comprehensive and fair evaluation, we conducted a series of controlled numerical experiments designed to assess the effectiveness of the proposed DL-based SNN architecture and the ASGAN. The experiments evaluate model performance under varying architectural configurations, data diversity conditions, and sliding window sizes, as well as the impact of synthetic data augmentation on recognition accuracy.

All experiments were performed using datasets from the CASAS smart home project [44,45], a widely adopted benchmark in AHAR research. The CASAS datasets consist of long-term activity recordings collected from real residential environments equipped with heterogeneous ambient sensors, including motion detectors, door sensors, and item usage sensors. These datasets are characterized by sparse, event-driven, and binary sensor streams, making them particularly suitable for evaluating AHAR models under realistic conditions. Specifically, six CASAS datasets were selected to validate the proposed framework across diverse environments, sensor layouts, and activity sets. These datasets vary in terms of the number of sensor events, the number and types of sensors deployed, and the range of activities performed by residents, thereby enabling a thorough assessment of model robustness and generalization capability.

All the CASAS datasets used in our experiments consist primarily of:

- Passive Infrared (PIR) motion sensors (binary on/off);
- Magnetic contact sensors for doors and cabinets (open/close);
- Item/furniture/appliance usage sensors (binary interaction events).

A summary of the key characteristics of each dataset, including the number of sensor events, sensors, and activity classes, is provided in Table 1. Furthermore, output classes used in each dataset are depicted in Table 2.

Table 1. Information about the datasets used for experimentation.

Dataset	Number of Sensor Events	Number of Binary Sensors	Number of Activities	Sensor Types	Environment
Aruba	1,719,558	34	11	Motion (31), Door (3)	A community-dwelling older woman
Twor	137,789	70	13	Motion (51), Door/Cabinet (12), Light Switch (7)	2 residents living in a student apartment
Cario	722,955	27	13	Motion (27)	2 community-dwelling adults with a pet
Tulum	486,912	31	9	Motion (31)	2 community-dwelling adults
Milan	433,665	31	15	Motion (28), Door (3)	A community-dwelling older adult with a pet
hh101	326,066	35	31	Motion (16), Light Switch (16), Door (3)	A community-dwelling older adult

Table 2. Output classes (activities) in each dataset.

Dataset	Activities
Aruba	'Sleeping', 'Bed to Toilet', 'Meal Preparation', 'Relax', 'Housekeeping', 'Eating', 'Wash Dishes', 'Leave Home', 'Enter Home', 'Work', 'Respirate'
Twor	'Work at computer', 'Sleeping', 'Bed to toilet', 'Groom', 'Breakfast', 'Prepare dinner', 'Prepare lunch', 'Cleaning', 'Work', 'Watch TV', 'Wash bathtub', 'Lunch', 'Dinner'
Cario	'Night wandering', 'Sleep', 'Breakfast', 'Leave home', 'Lunch', 'Dinner', 'Laundry', 'Bed to toilet', 'Wake', 'Work in office', 'Take medicine'
Tulum	'Sleeping', 'Personal hygiene', 'Leave home', 'Enter home', 'Meal Preparation', 'Breakfast' 'Watch TV', 'Bed to toilet', 'Work', 'Yoga', 'Wash Dishes', 'Lunch', 'Dinner'
Milan	'Bed to toilet', 'Sleep', 'Medications', 'Watch TV', 'Meal preparation', 'Chores', 'Leave home', 'Read', 'Enter home', 'Bathroom activity', 'Work', 'Eating', 'Meditate', 'Dining room activity', 'Bedroom Activity'
hh101	'Toilet', 'Relax', 'Personal hygiene', 'Leave home', 'Enter home', 'Sleep out of bed', 'Watch TV', 'Dress', 'Evening meds', 'Sleep', 'Read', 'Morning meds', 'Cook breakfast', 'Breakfast', 'Bath', 'Cook lunch', 'Lunch', 'Wash lunch dishes', 'Bed to toilet', 'Wash breakfast dishes', 'Work at Table', 'Wash dinner dishes', 'Cook dinner', 'Eat dinner', 'Cook', 'Phone', 'Wash dishes', 'Eat', 'Groom', 'Entertain Guests'

Due to the inherent class imbalance present in real-world AHAR datasets, the Synthetic Minority Over-sampling Technique (SMOTE) was applied to the training data to alleviate bias toward majority activity classes. SMOTE generates synthetic samples for minority classes without discarding existing data. SMOTE was applied exclusively to the training set, while the test set remained unchanged to ensure an unbiased evaluation.

To evaluate the impact of ensemble scale on recognition performance, we trained three DL-based SNN models that differ in the number of base learners. Specifically, Model *BM10* has 10 base models, Model *BM20* has 20 base models, and Model *BM30* has 30 base models. This design allows us to systematically examine how increasing ensemble diversity and capacity influences HAR performance. Classification Accuracy, defined as the proportion of correctly classified instances across all activity classes, is used as the primary evaluation metric to ensure consistency with prior work.

The Accuracy of the three proposed stacking models is evaluated across six datasets and compared internally and against literature-reported benchmarks from prior studies evaluating the same datasets under comparable experimental settings. In particular, the

following SOTA references are used as comparison benchmarks for the corresponding databases: hh101 [46], Aruba [15,47], Twor [13], Cairo [30,45,48,49], Tulum [45,47], and Milan [30,48,49]. For each dataset, the strongest accuracy value explicitly reported in the cited references is used as its baseline.

As can be seen in Figure 16, the highest-performing model among the three proposed stacking configurations achieves superior accuracy on five out of the six datasets when compared to their respective baselines. The observed positive gains range from a minimum improvement of 3.36 percentage points to a maximum of 39.21 percentage points, with an average accuracy increase of 13.28 percentage points across these datasets. For the Aruba dataset, the baseline slightly outperforms the proposed models by 1.65 percentage points in terms of accuracy. However, this marginal difference is isolated and does not detract from the overall trend of consistent and substantial performance improvements achieved by the proposed approach across heterogeneous smart home ambient sensor datasets.

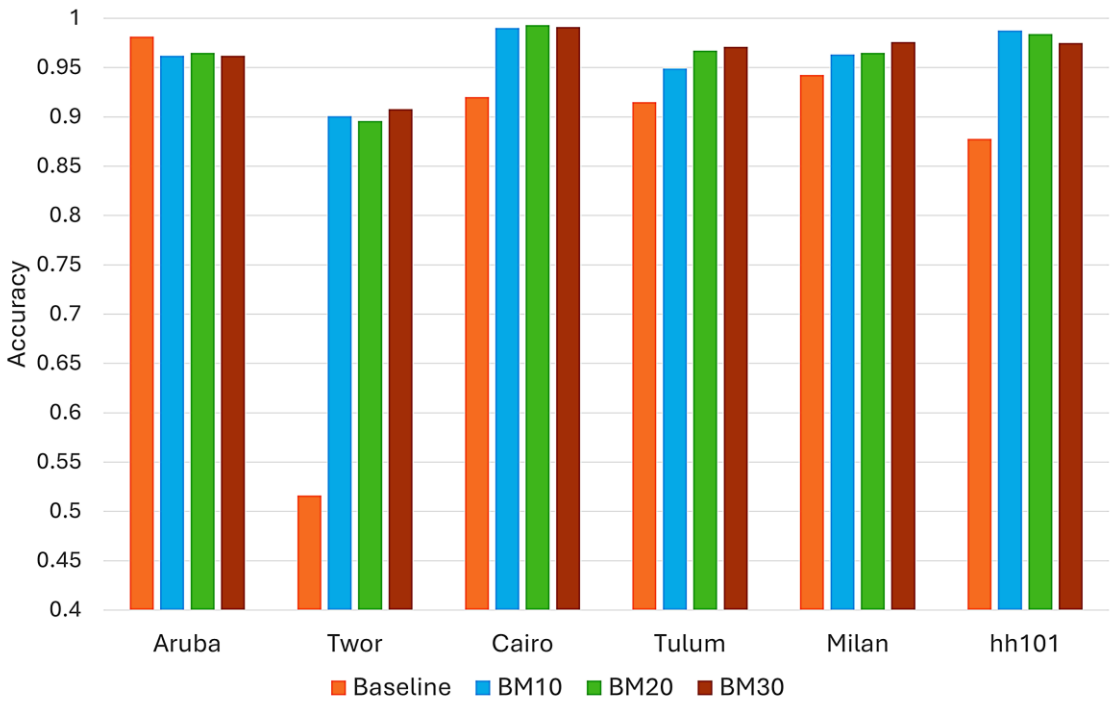

Figure 16. Accuracy of three stacking models compared with the baseline, for six datasets.

In addition to reporting raw accuracy improvements, we also conducted formal hypothesis testing to investigate whether there are statistically significant performance gains by the proposed framework over the benchmarks. As suggested by [50], we applied the Wilcoxon signed-rank test, a non-parametric test well-suited for pairwise comparison of ML models evaluated on the same datasets, as it does not assume normality of performance differences. The test was applied to compare each of the proposed DL-based SNN models against the benchmark methods across all datasets. The results again show that DL-based SNNs achieve statistically significant improvements over the benchmarks on five out of the six datasets. For conciseness, the detailed test statistics for the *BM10* configuration are reported in Table 3, with the remaining configurations exhibiting consistent trends.

Table 3. Wilcoxon signed-ranks test results for Model *BM10*.

Dataset	Baseline Accuracy	*BM10* Accuracy	Difference	Absolute Difference	Sign	Index	Ranked by Absolute Difference	Wilcoxon Signed-Rank
Aruba	0.9815 [15]	0.9619	−0.0196	0.0196	−1	3	1	−1
Twor	0.5160 [13]	0.9006	+0.3846	0.3846	+1	1	6	+6
Cario	0.9200 [45]	0.9901	+0.0701	0.0701	+1	6	4	+4
Tulum	0.9150 [47]	0.9490	+0.0340	0.0340	+1	2	3	+3
Milan	0.9424 [30]	0.9633	+0.0209	0.0209	+1	4	2	+2
hh101	0.8778 [46]	0.9874	+0.1096	0.1096	+1	5	5	+5

Next, to evaluate whether our proposed ASGAN effectively improves HAR performance by alleviating data scarcity, we conducted an additional set of experiments using ASGAN-augmented training data. Specifically, three models—*BM10-ASGAN*, *BM20-ASGAN*, and *BM30-ASGAN*—were constructed, corresponding directly to the baseline stacking models *BM10*, *BM20*, and *BM30*, respectively. All ASGAN-enhanced models share the same base model architectures and stacking configurations; the difference lies in the composition of the training data.

In detail, ASGAN was used to generate synthetic ambient sensor sequences that were combined with the original training data to enlarge the dataset. Both the training data used to fit the base models and the data used to train the meta-model were augmented in this manner. Testing was performed using the original dataset only, not the ASGAN-augmented data, to maintain integrity. A balanced augmentation strategy was adopted, in which the ratio of real to synthetic samples was set to 1:1, ensuring that the models benefit from increased data diversity while preserving the statistical characteristics of real sensor data.

Table 4 presents the accuracy improvements achieved through the use of data augmentation by ASGAN. Across all configurations, the three models trained on the augmented datasets consistently outperform their counterparts trained solely on real data, demonstrating the effectiveness of synthetic data generation for enhancing HAR performance. To rigorously assess the statistical significance of these gains, we also conducted the Wilcoxon signed-rank test for paired model comparisons. The results of these tests confirm that all these improvements were statistically significant and are not attributable to random variation.

Table 4. Accuracy improvements (percentage point) attributed to ASGAN.

Dataset	*BM10-ASGAN* and *BM10*	*BM20-ASGAN* and *BM20*	*BM30-ASGAN* and *BM30*
Aruba	1.15	1.68	0.44
Twor	4.77	1.05	2.84
Cario	0.45	0.42	0.2
Tulum	0.44	0.87	1.56
Milan	2.21	1.06	0.96
hh101	0.66	2.1	0.15
Average	1.61	1.20	1.03

Notably, the improvements achieved by ASGAN are robust across different datasets and ensemble sizes, highlighting the general applicability of the proposed approach. The observed accuracy improvements range from a minimum improvement of 0.15 percentage points to a maximum of 4.77 percentage points, underscoring ASGAN's capacity to mitigate data scarcity and improve model generalization in AHAR systems.

Furthermore, Table 5 presents the F1-scores achieved by three ASGAN-based models on the six datasets and compares them with literature-reported benchmark results obtained from prior studies evaluating the same datasets under comparable experimental settings. In particular, the following SOTA references are used as comparison benchmarks for the corresponding databases: Aruba [15], Twor [13], Cairo [30,45,48], Tulum [45], Milan [30,48], and hh101 [46]. The best F1-score explicitly reported in the cited references evaluating each CASAS dataset is taken as its baseline.

Table 5. F1-scores of three ASGAN-based models.

Dataset	Baseline F1-Score	*BM10-ASGAN*	*BM20-ASGAN*	*BM30-ASGAN*
Aruba	0.9170 [15]	0.9168	0.9180	0.9189
Twor	0.5230 [13]	0.8323	0.8268	0.8410
Cario	0.9200 [45]	0.9347	0.9394	0.9362
Tulum	0.8790 [45]	0.8943	0.9076	0.9117
Milan	0.9400 [30]	0.9157	0.9157	0.9268
hh101	0.8640 [46]	0.9301	0.9245	0.9329

The proposed ASGAN-augmented models consistently outperform the corresponding baseline on all datasets where F1-scores are available, including Aruba, with the sole exception of the Milan dataset, where performance remains comparable. These results provide further empirical evidence that ensemble-based DL architectures combined with adversarial data augmentation improve model robustness under class imbalance and limited labeled data, complementing the accuracy-based evaluation presented earlier. This also demonstrates methodological gains across heterogeneous sensor deployments and seamless model generalization on event-level spatiotemporal patterns, rather than exploiting handcrafted sensor-specific features, supporting its application in real-world smart home environments.

6. Conclusions and Future Research Directions

Achieving high recognition accuracy remains a central challenge in AHAR, particularly in real-world deployments where labeled data is limited and sensor streams are sparse and event-driven. To address these challenges, in this research, we proposed a DL-based SNN that combines CNN and LSTM base models for AHAR to jointly capture spatial and temporal characteristics of ambient sensors. In parallel, we developed a GAN-based model, ASGAN, to explicitly mitigate the issue of insufficient data by generating realistic synthetic sensor data to augment the training dataset. By combining ensemble-based representation learning with adversarial data generation, the proposed framework directly targets the dual challenges of recognition accuracy and insufficient training data in AHAR systems.

The results of the first set of experiments show that the proposed DL-based stacking method statistically improved activity recognition accuracy across all-but-one datasets, with gains ranging from 3.36 to 39.21 percentage points and an average improvement of 13.28 percentage points. This improvement was observed on several stacking models with different numbers of base models, all of which outperformed the corresponding baseline. In the second set of experiments, models trained using the ASGAN-augmented datasets significantly outperformed models trained only using real data, with additional accuracy gains ranging between 0.15 and 4.77 percentage points and an average improvement of 1.28 percentage points. These findings demonstrate the effectiveness of combining ensemble-based stacking with ASGAN-generated synthetic data in improving AHAR performance. By combining DL-based stacking methods with GAN-generated synthetic

data, we can achieve highly accurate and robust activity recognition models, addressing the challenges of both accuracy and data scarcity in AHAR applications.

Several avenues for future research can enhance the accuracy, robustness, and practicality of HAR systems. These include integrating multiple sensor modalities, improving model interpretability, adapting to contextual information, rigorously evaluating the quality of GAN-generated synthetic data, adopting advanced sequence modelling paradigms, and ensuring privacy protection. Integrating various sensor modalities like ambient sensors, wearables, and video data can improve accuracy, especially in complex environments where different sensors capture complementary information. Another key area for future research is improving model interpretability. While DL models achieve high accuracy, their "black-box" nature can limit trust and adoption, especially in sensitive domains. Techniques such as attention mechanisms and explainable Artificial Intelligence or feature attribution methods can help users and practitioners understand why a model makes specific predictions, enhancing transparency and trust in the system outputs.

Incorporating contextual information, such as time of day and environmental conditions, can improve model adaptability and generalization across different households and scenarios. Context-aware models can better understand and respond to changes in the environment, reducing errors arising from atypical or ambiguous activity patterns, and leading to more reliable activity recognition. Moreover, developing evaluation metrics for the quality of synthetic data can help further validate whether the generated samples truly preserve the statistical, temporal, and structural characteristics of real-world sensory data. Such metrics may include distributional similarity measures and temporal dependency analysis, which would enable a more rigorous assessment of synthetic data fidelity beyond downstream classification performance alone.

Future work could also explore the integration of more advanced sequence modeling paradigms within the proposed AHAR framework. In particular, attention-based and transformer architectures offer promising capabilities for modeling long-range dependencies and selectively focusing on informative sensor events, which could further enhance activity discrimination in complex environments. Likewise, although the performance achieved by the introduction of ASGAN proves the potential of synthetic data in HAR development, this study mostly focuses on already commonly used DL architectures such as CNN and LSTM. With the recent success achieved by more modern architectures such as transformers in many fields, further works should focus on developing transformer-based synthetic data augmentation and SNNs based on more varieties of modern architectures. Another interesting direction for future research is to conduct sensor-level ablation and contribution analyses to quantify the relative importance of different sensor types and locations, thereby improving model interpretability and informing optimal sensor deployment strategies in smart home environments.

Privacy preservation and efficient deployment remain important considerations for practical adoption of HAR models. Future work could explore secure, lightweight model architectures, or adaptive inference mechanisms to ensure HAR systems remain non-intrusive, computationally efficient, and suitable for edge deployment in smart homes or AAL environments. Such advancements help evolve toward more accurate, robust, interpretable, and practical models and solutions, benefiting healthcare, assisted living, smart home automation, and industrial applications.

Author Contributions: Conceptualization, Q.Z. and A.G.; methodology, Q.Z. and A.G.; software, Q.Z. and L.B.; validation, A.G.; formal analysis, Q.Z. and A.G.; investigation, A.G. and L.B.; resources, A.G. and A.S.; data curation, Q.Z. and L.B.; writing—original draft preparation, Q.Z.; writing—review and editing, A.G. and A.S.; visualization, Q.Z. and A.S.; supervision, A.G. and A.S.; project adminis-

tration, A.G.; funding acquisition, A.G. All authors have read and agreed to the published version of the manuscript.

Funding: This research received no external funding.

Data Availability Statement: Dataset available on request from the authors.

Conflicts of Interest: The authors declare no conflicts of interest.

Abbreviations

The following abbreviations are used in this manuscript:

AAL	Ambient Assisted Living
ADLs	Activities of Daily Living
AHAR	Ambient Sensor-based Human Activity Recognition
ASGAN	Ambient Sensor Generative Adversarial Network
CNNs	Convolutional Neural Networks
DL	Deep Learning
FC	Fully connected
GANs	Generative Adversarial Networks
HAR	Human activity recognition
LSTM	Long Short-Term Memory
ML	Machine Learning
SMOTE	Synthetic Minority Over-sampling Technique
SNN	Stacking Neural Network
SOTA	State-of-the-art

References

1. Ravuri, A.; Shankar, S.S.; Devan, D.P.; Padhi, M.K.; Ragavan, V.S.; Maurya, M.; Ravi, A. A Systematic Literature Review on Human Activity Recognition. *J. Electr. Syst.* **2024**, *20*, 1175–1191. [CrossRef]
2. Manaf, A.; Singh, S. Computer Vision-based Survey on Human Activity Recognition System, Challenges and Applications. In Proceedings of the 2021 3rd International Conference on Signal Processing and Communication (ICPSC), Coimbatore, India, 13–14 May 2021; pp. 110–114.
3. Zhang, S.; Li, Y.; Zhang, S.; Shahabi, F.; Xia, S.; Deng, Y.; Alshurafa, N. Deep learning in human activity recognition with wearable sensors: A review on advances. *Sensors* **2022**, *22*, 1476. [CrossRef]
4. Ranasinghe, S.; Al Machot, F.; Mayr, H.C. A review on applications of activity recognition systems with regard to performance and evaluation. *Int. J. Distrib. Sens. Netw.* **2016**, *12*, 1550147716665520. [CrossRef]
5. Nizar Banu, P.K.; Kavitha, R. Single activity recognition system: A review. *Internet Things (IoT) Concepts Appl.* **2020**, 257–271. [CrossRef]
6. Plötz, T. Using Graphs to Perform Effective Sensor-Based Human Activity Recognition in Smart Homes. *Sensors* **2024**, *24*, 3944. [CrossRef] [PubMed]
7. LeCun, Y.; Bengio, Y.; Hinton, G. Deep learning. *Nature* **2015**, *521*, 436–444. [CrossRef]
8. Ramadan, A.; Saïd, F.; De Lamotte, F.F. Enhanced Online Segmentation and Performance Evaluation Method for Real-Time Activity Recognition in Smart Homes. In Proceedings of the 2024 IEEE EMBS International Conference on Biomedical and Health Informatics (BHI), Houston, TX, USA, 10–13 November 2024; pp. 1–8. [CrossRef]
9. Seyedtalebi, N.; Silvestri, S. Human Activity Recognition Using Spectrograms of Binary Motion Sensor Data. In Proceedings of the 2024 20th International Conference on Distributed Computing in Smart Systems and the Internet of Things (DCOSS-IoT), Abu Dhabi, United Arab Emirates, 29 April–1 May 2024; pp. 377–383. [CrossRef]
10. Hammerla, N.Y.; Halloran, S.; Plötz, T. Deep, convolutional, and recurrent models for human activity recognition using wearables. *arXiv* **2016**, arXiv:1604.08880. [CrossRef]
11. Gochoo, M.; Tan, T.H.; Liu, S.H.; Jean, F.R.; Alnajjar, F.S.; Huang, S.C. Unobtrusive activity recognition of elderly people living alone using anonymous binary sensors and DCNN. *IEEE J. Biomed. Health Inform.* **2018**, *23*, 693–702. [CrossRef]
12. Mohmed, G.; Lotfi, A.; Pourabdollah, A. Employing a deep convolutional neural network for human activity recognition based on binary ambient sensor data. In Proceedings of the 13th ACM International Conference on PErvasive Technologies Related to Assistive Environments, Corfu, Greece, 30 June–3 July 2020; pp. 1–7.

13. Wu, D.; Pateria, S.; Subagdja, B.; Tan, A.H. FedSTEM-ADL: A Federated Spatial-Temporal Episodic Memory Model for ADL Prediction. In Proceedings of the 2024 International Joint Conference on Neural Networks (IJCNN), Yokohama, Japan, 30 June–5 July 2024; pp. 1–8.
14. Murad, A.; Pyun, J.Y. Deep recurrent neural networks for human activity recognition. *Sensors* **2017**, *17*, 2556. [CrossRef]
15. Tan, T.H.; Badarch, L.; Zeng, W.X.; Gochoo, M.; Alnajjar, F.S.; Hsieh, J.W. Binary Sensors-Based Privacy-Preserved Activity Recognition of Elderly Living Alone Using an RNN. *Sensors* **2021**, *21*, 5371. [CrossRef]
16. Li, Y.; Yang, G.; Su, Z.; Li, S.; Wang, Y. Human activity recognition based on multienvironment sensor data. *Inf. Fusion* **2023**, *91*, 47–63,520–525. [CrossRef]
17. Chen, H.; Gouin-Vallerand, C.; Bouchard, K.; Gaboury, S.; Couture, M.; Bier, N.; Giroux, S. Enhancing Human Activity Recognition in Smart Homes with Self-Supervised Learning and Self-Attention. *Sensors* **2024**, *24*, 884. [CrossRef]
18. Huang, X.; Zhang, S. Human Activity Recognition based on Transformer in Smart Home. In Proceedings of the 2023 2nd Asia Conference on Algorithms, Computing and Machine Learning (CACML 2023), Shanghai, China, 17–19 March 2023; ACM: New York, NY, USA; p. 6.
19. Skocir, P.; Krivic, P.; Tomeljak, M.; Kusek, M.; Jezic, G. Activity Detection in Smart Home Environment. *Procedia Comput. Sci.* **2016**, *96*, 672–681. [CrossRef]
20. Acampora, G.; Cook, D.J.; Rashidi, P.; Vasilakos, A.V. A Survey on Ambient Intelligence in Healthcare. *Proc. IEEE* **2013**, *101*, 2470–2494. [CrossRef] [PubMed]
21. Chua, S.L.; Foo, L.K.; Guesgen, H.W. Predicting Activities of Daily Living with Spatio-Temporal Information. *Future Internet* **2020**, *12*, 214. [CrossRef]
22. Zhu, H.; Samtani, S.; Brown, R.A.; Chen, H. A Deep Learning Approach for Recognizing Activity of Daily Living (ADL) for Senior Care: Exploiting Interaction Dependency and Temporal Patterns. *MIS Q.* **2021**, *45*, 859–896. [CrossRef]
23. Cook, D.J.; Crandall, A.S.; Thomas, B.L.; Krishnan, N.C. CASAS: A Smart Home in a Box. *Computer* **2013**, *46*, 62–69. [CrossRef]
24. Chen, W.-H.; Chen, Y. An ensemble approach to activity recognition based on binary sensor readings. In Proceedings of the 2017 IEEE 19th International Conference on e-Health Networking, Applications and Services (Healthcom), Dalian, China, 12–15 October 2017; IEEE: New York, NY, USA.
25. Guan, Y.; Plötz, T. Ensembles of Deep LSTM Learners for Activity Recognition using Wearables. *Proc. ACM Interact. Mob. Wearable Ubiquitous Technol.* **2017**, *1*, 1–28. [CrossRef]
26. Yang, J.; Nguyen, M.N.; San, P.P.; Li, X.; Krishnaswamy, S. Deep convolutional neural networks on multichannel time series for human activity recognition. *Ijcai* **2015**, *15*, 3995–4001.
27. Nawal, Y.; Oussalah, M.; Fergani, B.; Fleury, A. New incremental SVM algorithms for human activity recognition in smart homes. *J. Ambient. Intell. Humaniz. Comput.* **2023**, *14*, 13433–13450. [CrossRef]
28. Ramasamy Ramamurthy, S.; Roy, N. Recent trends in machine learning for human activity recognition—A survey. *Wiley Interdiscip. Rev. Data Min. Knowl. Discov.* **2018**, *8*, e1254. [CrossRef]
29. Plötz, T.; Hammerla, N.Y.; Olivier, P.L. Feature learning for activity recognition in ubiquitous computing. In Proceedings of the Twenty-Second International Joint Conference on Artificial Intelligence, Barcelona, Spain, 16–22 July 2011.
30. Liciotti, D.; Bernardini, M.; Romeo, L.; Frontoni, E. A sequential deep learning application for recognising human activities in smart homes. *Neurocomputing* **2020**, *396*, 501–513. [CrossRef]
31. Tahir, S.F.; Fahad, L.G.; Kifayat, K. Key feature identification for recognition of activities performed by a smart-home resident. *J. Ambient. Intell. Humaniz. Comput.* **2020**, *11*, 2105–2115. [CrossRef]
32. Yan, S.; Lin, K.J.; Zheng, X.; Zhang, W. Using latent knowledge to improve real-time activity recognition for smart IoT. *IEEE Trans. Knowl. Data Eng.* **2019**, *32*, 574–587. [CrossRef]
33. Bouchabou, D.; Nguyen, S.M.; Lohr, C.; Leduc, B.; Kanellos, I. Fully convolutional network bootstrapped by word encoding and embedding for activity recognition in smart homes. In Proceedings of the International Workshop on Deep Learning for Human Activity Recognition, Yokohama, Japan, 8 January 2021; Springer: Berlin/Heidelberg, Germany, 2021; pp. 111–125.
34. Fahad, L.G.; Tahir, S.F. Activity recognition and anomaly detection in smart homes. *Neurocomputing* **2021**, *423*, 362–372. [CrossRef]
35. Ye, X.; Sakurai, K.; Nair, N.-K.C.; Wang, K.I.-K. Machine Learning Techniques for Sensor-Based Human Activity Recognition with Data Heterogeneity—A Review. *Sensors* **2024**, *24*, 7975. [CrossRef] [PubMed]
36. Alaghbari, K.A.; Saad, M.H.; Hussain, A.; Alam, M.R. Activities Recognition, Anomaly Detection and Next Activity Prediction Based on Neural Networks in Smart Homes. *IEEE Access* **2022**, *10*, 28219–28232. [CrossRef]
37. Gupta, N.; Gupta, S.K.; Pathak, R.K.; Jain, V.; Rashidi, P.; Suri, J.S. Human activity recognition in artificial intelligence framework: A narrative review. *Artif. Intell. Rev.* **2022**, *55*, 4755–4808. [CrossRef] [PubMed]
38. Xu, S.; Tang, Q.; Jin, L.; Pan, Z. A cascade ensemble learning model for human activity recognition with smartphones. *Sensors* **2019**, *19*, 2307. [CrossRef]
39. Mashhadi, P.S.; Nowaczyk, S.; Pashami, S. Stacked ensemble of recurrent neural networks for predicting turbocharger remaining useful life. *Appl. Sci.* **2019**, *10*, 69. [CrossRef]

40. Pothuganti, S. Review on over-fitting and under-fitting problems in machine learning and solutions. *Int. J. Adv. Res. Electrical. Electron. Instrum. Eng.* **2018**, *7*, 3692–3695.
41. Friedman, M. The use of ranks to avoid the assumption of normality implicit in the analysis of variance. *J. Am. Stat. Assoc.* **1937**, *32*, 675–701. [CrossRef]
42. Ding, J.; Li, X.; Gudivada, V. Augmentation and evaluation of training data for deep learning. In Proceedings of the 2017 IEEE International Conference on Big Data (Big Data), Boston, MA, USA, 11–14 December 2017; pp. 2603–2611.
43. Goodfellow, I.; Pouget-Abadie, J.; Mirza, M.; Xu, B.; Warde-Farley, D.; Ozair, S.; Courville, A.; Bengio, Y. Generative adversarial networks. *Commun. ACM* **2020**, *63*, 139–144. [CrossRef]
44. Cook, D.J.; Schmitter-Edgecombe, M. Assessing the quality of activities in a smart environment. *Methods Inf. Med.* **2009**, *48*, 480–485. [CrossRef]
45. Guo, J.; Li, Y.; Hou, M.; Han, S.; Ren, J. Recognition of daily activities of two residents in a smart home based on time clustering. *Sensors* **2020**, *20*, 1457. [CrossRef] [PubMed]
46. Liu, Y.; Mu, Y.; Chen, K.; Li, Y.; Guo, J. Daily activity feature selection in smart homes based on pearson correlation coefficient. *Neural Process. Lett.* **2020**, *51*, 1771–1787. [CrossRef]
47. Ashry, S.; Ogawa, T.; Gomaa, W. CHARM-Deep: Continuous human activity recognition model based on deep neural network using IMU sensors of smartwatch. *IEEE Sens. J.* **2020**, *20*, 8757–8770. [CrossRef]
48. Mekruksavanich, S.; Jantawong, P.; Surinta, O.; Hnoohom, N.; Jitpattanakul, A. Deep learning for recognizing daily human activities using smart home sensors. *ICIC Express Lett.* **2023**, *17*, 1375–1383.
49. Sanpote, W.; Jantawong, P.; Hnoohom, N.; Jitpattanakul, A.; Mekruksavanich, S. Deep Learning Approaches for Recognizing Daily Human Activities Using Smart Home Sensors. In Proceedings of the 2023 Joint International Conference on Digital Arts, Media and Technology with ECTI Northern Section Conference on Electrical, Electronics, Computer and Telecommunications Engineering (ECTI DAMT & NCON), Phuket, Thailand, 22–25 March 2023; pp. 469–473.
50. Demšar, J. Statistical comparisons of classifiers over multiple data sets. *J. Mach. Learn. Res.* **2006**, *7*, 1–30.

Disclaimer/Publisher's Note: The statements, opinions and data contained in all publications are solely those of the individual author(s) and contributor(s) and not of MDPI and/or the editor(s). MDPI and/or the editor(s) disclaim responsibility for any injury to people or property resulting from any ideas, methods, instructions or products referred to in the content.